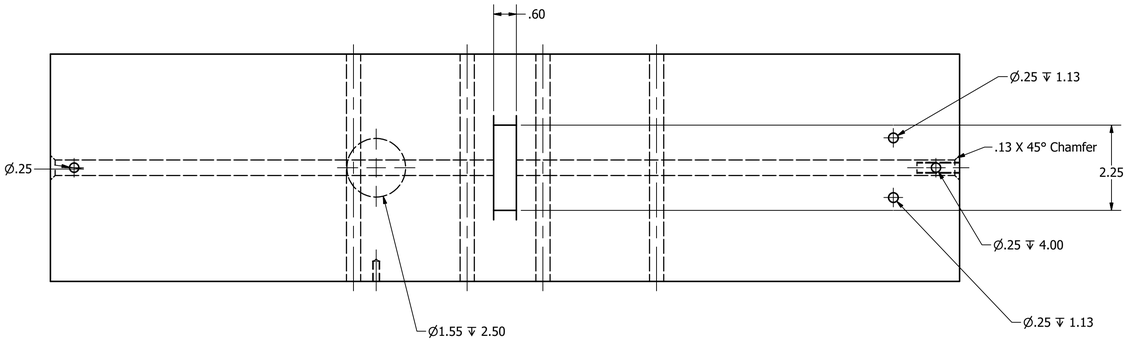

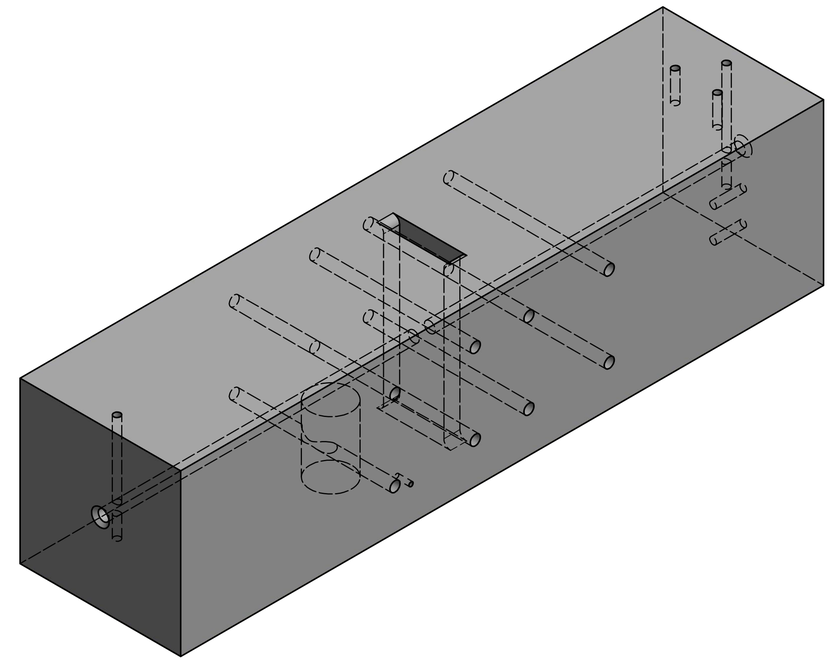

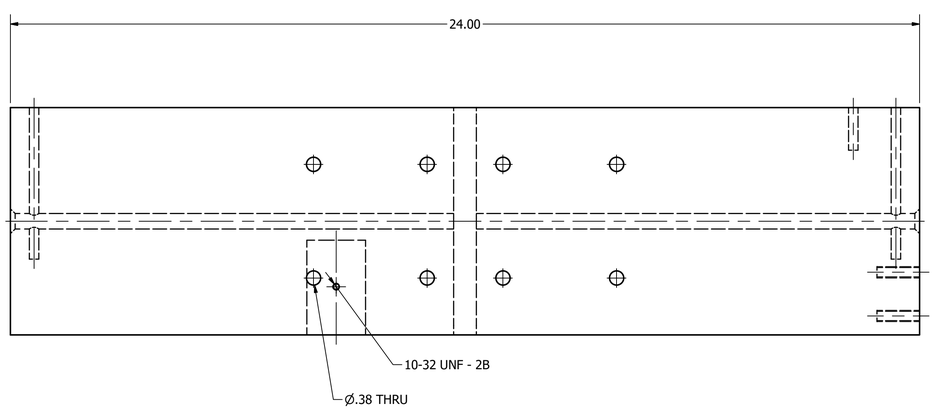

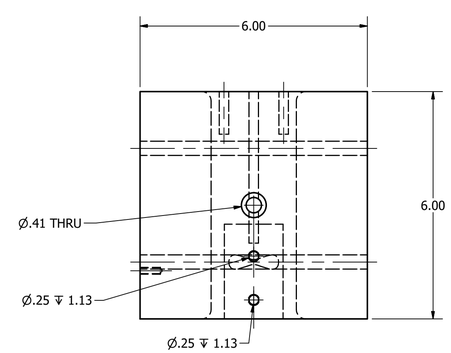

2. REFER TO MEMO FOR STANDARD TOLERANCING

1. UNLESS OTHERWISE SPECIFIED US CUSTOMARY UNITS

NOTES:

DRAWN BY: Andy Perez	11/21/2017
TREE HUGGER TREE STAND SAFETY DEVICE	
TITLE BLOCK	
SIZE D	DWG NO TSSD-10	REV IR
SCALE 1 / 2	SHEET 1 OF 1